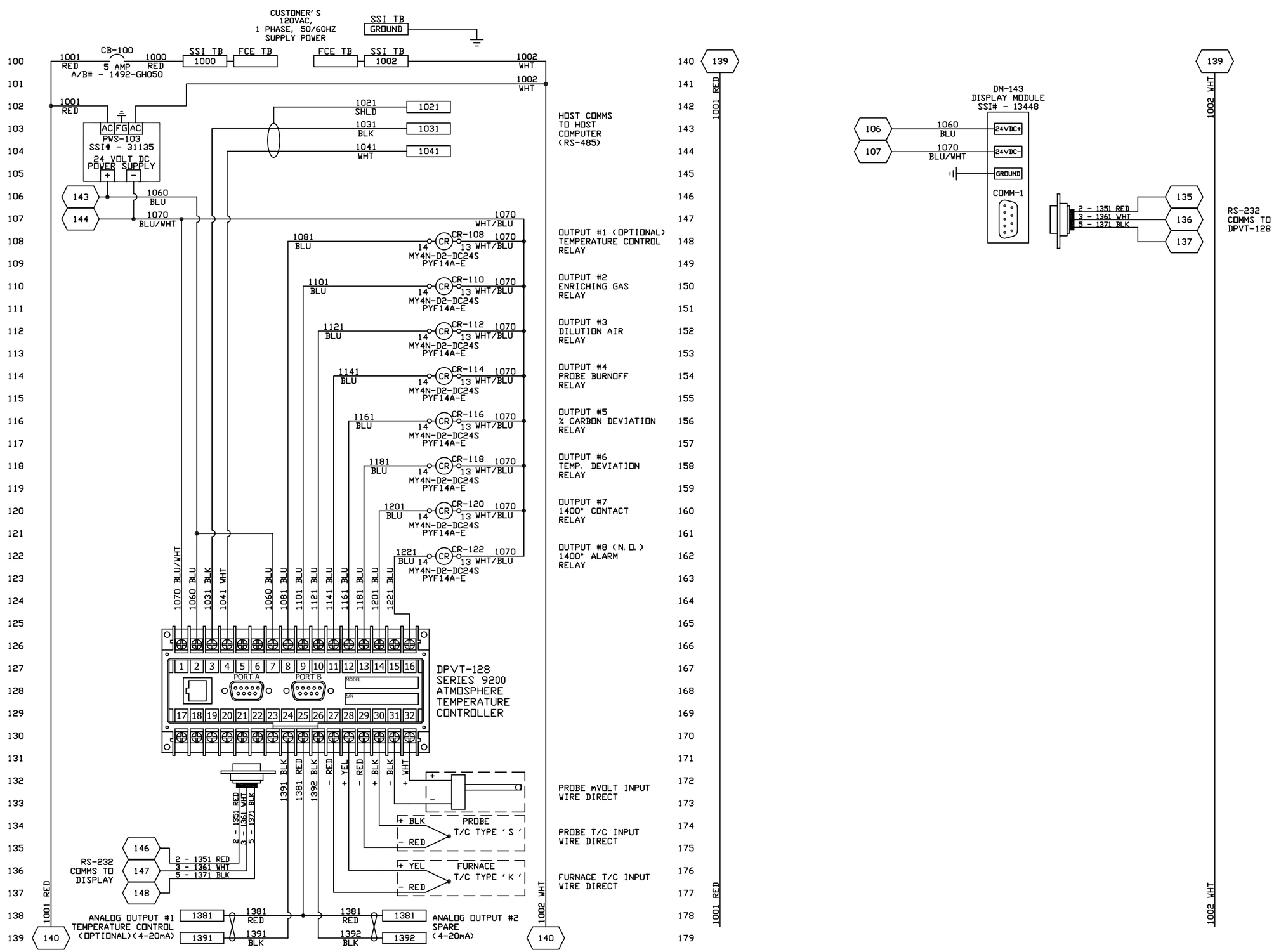

OR

DENOTES TERMINAL BLOCK

SUPER SYSTEMS INC.
(800) 666-4330
www.supersystems.com

1 - 24VDC (COM)	12 - RELAY OUT 5	22 - SLAVE 2 RS485 (+)
2 - 24VDC (+)	13 - RELAY OUT 6	23 - SLAVE 2 RS485 (-)
3 - RS485 RT (-)	14 - RELAY OUT 7	24 - 4-20mA OUT 1 (-)
4 - RS485 RT (+)	15 - RELAY OUT 8 NC	25 - 4-20mA OUT COM (+)
5 - SLAVE 1 RS485 (-)	16 - RELAY OUT 8 NO	26 - 4-20mA OUT 2 (-)
6 - SLAVE 1 RS485 (+)	17 - DIGITAL IN 1	27 - ANALOG IN 3 (-)
7 - RELAY COMMON	18 - DIGITAL IN 2	28 - ANALOG IN 3 (+)
8 - RELAY OUT 1	19 - DIGITAL IN 3	29 - ANALOG IN 2 (-)
9 - RELAY OUT 2	20 - DIGITAL IN 4	30 - ANALOG IN 2 (+)
10 - RELAY OUT 3	21 - DIGITAL IN COM	31 - ANALOG IN 1 (-)
11 - RELAY OUT 4		32 - ANALOG IN 1 (+)

9200 PINOUT LABEL

REFERENCE DRAWING(S)

THIS DRAWING IS FURNISHED AS A GUIDELINE ONLY.
FINAL INSTALLATION DIAGRAMS ARE THE RESPONSIBILITY OF OTHERS.

REV.	DESCRIPTION	DRAWN	DATE	APPROVED

9200 BASIC WIRING DIAGRAM

ATMOSPHERE & TEMPERATURE CONTROL SYSTEM

BASIC WIRING DIAGRAM

APPROVALS	DATE	DWG. NO. SHEET-1	REV.
DRAWN GDG	03-30-2007	\ELECTRONICS\SERIES 9200\	
CHECKED		SCALE 1:1	SHEET 1 OF 1
ISSUED			

UNLESS OTHERWISE SPECIFIED DIMENSIONS ARE IN INCHES
TOLERANCES ARE:
FRACTIONS ±1/64' DECIMALS X. X=±0. 100 X. XX=±0. 010 X. XXX=±0. 001 ANGLES ±0. 5°

NOTICE: THIS DRAWING AND THE INFORMATION HEREIN IS OWNED BY SUPER SYSTEMS, INC. ("SSI"). SSI RESERVES ALL RIGHTS INCLUDING TITLE, COPYRIGHT, PATENT RIGHTS AND THE RIGHT OF POSSESSION IN THE DRAWING AND ITS CONTENTS, EXCEPT AS AUTHORIZED BY SSI IN WRITING. ANY DISCLOSURE, REPRODUCTION, OR USE OF THIS DRAWING OR THE INFORMATION AND SPECIFICATIONS HEREIN IS STRICTLY PROHIBITED.

SSi CINCINNATI, OHIO

07-07-2008 1:59:51 PM